Slurry Concentration Kit

Instructions for Use

This instruction describes how to determine slurry concentration using the Slurry Concentration Kit. For determination of concentration relative to gravity settled resin amount in water, slurry is added to a Tricorn™ 10/100 column (included in the kit), then washed, re-suspended, consolidated, and allowed to settle for 30 min before the concentration is measured. When slurry is kept in storage solution, one washing step is needed to equilibrate properly to water. For determination of concentration relative to consolidated resin amount when using packing factor instead of compression factor (i.e., AxiChrom™ packing but also for use with BPG column), slurry is added to a Tricorn 10/100 column, consolidated in purified water and allowed to settle for a time that depends on the resin.

Kit contents

Item	Quantity
Tricorn 10/100 glass column	1
Tricorn 10 bottom unit	2
Bottom unit filter	20
Stop plug 1/16"	1
Luer-Lok™-HPLC connector	1
Syringe, 30 mL	1
Transparent plastic ruler	1

1 Illustration

The following illustration outlines the Slurry Concentration Kit parts.

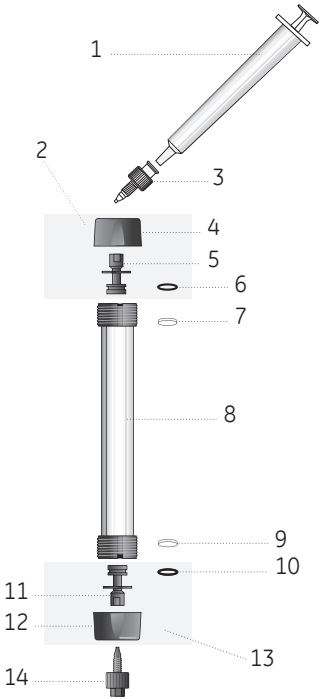

Part	Description
1	Syringe, 30ml
2	Tricorn 10 bottom unit
3	Luer-Lok-HPLC connector
4	End cap
5	Filter holder
6	Tricorn O-ring, 7 x 1 mm
7	Bottom unit filter
8	Tricorn 10/100 glass column
9	Bottom unit filter
10	Tricorn O-ring, 7 x 1 mm
11	Filter holder
12	End cap
13	Tricorn 10 bottom unit
14	Stop plug 1/16 inch

2 Measurement corresponding to gravity settled resin in water

Fill the column

Step	Action
1	Mount the bottom unit with filter on the Tricorn 10/100 column.
2	Carefully tape the transparent ruler on the side of the column, so that the zero point on the ruler coincides with the surface of the bottom filter.
3	Fit a stop plug in the bottom outlet.

Step	Action
4	Place the column in an upright position.
5	If the slurry concentration is higher than 60%, add exactly 4 cm of distilled water to the column.
6	Add thoroughly mixed slurry to the column with a pipette up to the 10 cm mark, making sure the meniscus is at the 10 cm mark. Keep the mouth of the pipette below the 10 cm mark to avoid leaving resin on the column wall.
7	Add distilled water until the column is filled.
8	Mount the second bottom unit with filter as end piece on the top of the column.

Wash the slurry

Step	Action
1	Fill the 30 mL syringe with distilled water and fit it to the top of the column using the supplied connector.
2	Remove the stop plug from the bottom outlet of the column.
3	Wash the slurry with a total of 50 to 60 mL water at a flow of approximately 5 to 10 mL/min by pressing the syringe. Refill the syringe as required. Avoid pressing air into the column.
4	Close the bottom of the column using the stop plug.

Resuspend and allow to settle

Step	Action
1	Remove the upper end piece from the column.
2	Mix the resin in the column thoroughly by stirring gently with an appropriate tool.
3	Refit the upper end piece. Avoid introducing air into the column.
4	Fill the 30 mL syringe with distilled water and fit it to the top of the column using the supplied connector.
5	Remove the stop plug from the bottom outlet of the column.
6	Press the syringe at 5 to 10 mL/min until the liquid over the resin bed is clear. ***Note:*** *To get an accurate reading of bed heigh, keep the column vertical while the resin is settling.*
7	Stop the flow.
8	Close the bottom of the column using the stop plug.

Determine the slurry concentration

Step	Action
1	Allow the bed to stabilize for 30 min without flow.
2	Read the bed height.

The measured slurry concentration in percent is given directly by the bed height in cm. For example, a bed height of 4 cm corresponds to a slurry concentration of 40%.

If the column was initially filled with 4 cm water and 6 cm slurry, calculate the undiluted concentration by multiplying the measured concentration by 1.67. For example, a bed height of 4 cm gives a slurry concentration of (0.4 × 1.67) × 100 = 66.8%.

3 Measurement corresponding to consolidated resin

Fill the column

Step	Action
1	Mount the bottom unit with filter on the Tricorn 10/100 column.
2	Carefully tape the transparent ruler on the side of the column, so that the zero point on the ruler coincides with the surface of the bottom filter.
3	Fit a stop plug in the bottom outlet.
4	Place the column in an upright position.
5	Add thoroughly mixed slurry to the column with a pipette up to the 10 cm mark, making sure the meniscus is at the 10 cm mark. Keep the mouth of the pipette below the 10 cm mark to avoid leaving resin on the column wall.

Step	Action
6	Add distilled water until the column is filled.
7	Mount the second bottom unit with filter as end piece on the top of the column.

Allow to settle

Step	Action
1	Fill the 30 mL syringe with distilled water and fit it to the top of the column using the supplied connector.
2	Remove the stop plug from the bottom outlet of the column.
3	Press the syringe at 5 to 10 mL/min until the liquid over the resin bed is clear. ***Note:*** *To get an accurate reading of bed height, keep the column vertical while the resin settles.*
4	Stop the flow.
5	Close the bottom of the column using the stop plug.

Determine the slurry concentration

Step	Action
1	Allow the bed to stabilize according to the table below, since the time for stabilization depends on the resin characteristics.

Resin	Stabilization time (min)
Capto™ adhere	0
Capto adhere ImpRes	15
Capto Butyl	0[1]
Capto DEAE	10
Capto L	5
Capto MMC	0
Capto MMC ImpRes	10
Capto S	0
Capto S ImpAct	5
Capto SP ImpRes	30
DEAE Sepharose™ FF	0[2]
MabSelect™ SuRe	5
Sephadex™ G25M	0
SP Sepharose FF	0
SP Sepharose HP	0
Superdex™ 200 pg	0

[1] Consolidation in 20% ethanol is required.

[2] Slurry concentration should be read before the syringe is removed.

Step	Action
2	Read the bed height. The measured slurry concentration in percent is given directly by the bed height in cm. For example, a bed height of 4 cm corresponds to a slurry concentration of 40%.

Determine the stabilization time for resins not included in the list

The following section describes how to determine the stabilization time for the measuring of the slurry concentration for packing methods utilizing packing factors, such as AxiChrom.

Step	Action
1	Fill the Tricorn column and allow to settle as described for consolidated resin.
2	Read and note the bed height every 5 minutes for 30 to 60 minutes. The measured slurry concentration in percent for every time point is given directly by the bed height in cm.

Step	Action
3	With no modifications to the sampled slurry, perform a pack as normal in an AxiChrom column (300 and larger) until bed detection occurs. The detected bed is the consolidated resin volume in the column. The concentration drawn into the AxiChrom column is then calculated by using the following equation: $$\frac{A}{B - (1 + C)}$$ Where **A** is **the bed detection height (cm)** **B** is **the slurry fill height (cm)** **C** is **the valve and slurry tank tube volume (cm)** [1]
4	The concentration calculated from the filling in AxiChrom can now be compared to the concentration measured in Tricorn at different stabilization times, and the best fit gives the optimal time to read the concentration in Tricorn columns.

To make the method more accurate and robust, perform this procedure in triplicates or more, both in terms of the Tricorn measurement and for the column filling and consolidated bed settling and detection.

[1] Convert the external volume to a height (cm) in the AxiChrom column.

4 Ordering information

Item		Part no.
Slurry Concentration Kit		29096100
Spare parts		
	Glass tube 10/100	18115315
	Tricorn 10 Bottom Unit	18115310
	Tricorn O-ring, 7 × 1 mm	18115312
	Stop Plug, 1/16" Male	18111252
	Tricorn 10 Filter Kit	29053612
	Connector 1/16" Male/Luer Female	18111251

cytiva.com/bioprocess

Cytiva and the Drop logo are trademarks of Global Life Sciences IP Holdco LLC or an affiliate.

Axichrom, Capto, MabSelect, Sephacryl, Sephadex, Sepharose, Superdex and Tricorn are trademarks of Global Life Sciences Solutions USA LLC or an affiliate doing business as Cytiva.

Luer-Lok is a trademark of Becton, Dickinson and Company.

All other third-party trademarks are the property of their respective owners.

© 2020 Cytiva

All goods and services are sold subject to the terms and conditions of sale of the supplying company operating within the Cytiva business. A copy of those terms and conditions is available on request. Contact your local Cytiva representative for the most current information.

For local office contact information, visit cytiva.com/contact

29112530 AD V:8 07/2020