AxiChrom™ 300–1600 columns wheel kits

Instructions for use

Original instructions

Translation disc included



cytiva.com

Table of Contents

1 Introduction 3

2 Safety Instructions 5

3 AxiChrom 300–600 wheel kit 8

3.1 Wheel kit description 10
3.2 Fit the wheel kit 12
3.3 Remove the wheel kit 17

4 AxiChrom 800–1000 wheel kit 21

4.1 Wheel kit description 23
4.2 Fit the wheel kit 25
4.3 Remove the wheel kit 32

5 AxiChrom 1200–1600 wheel kit 35

5.1 Wheel kit description 37
5.2 Fit the wheel kit 39
5.3 Remove the wheel kit 46

1 Introduction

About this document

This document describes wheel kits for AxiChrom™ 300–1600 columns. The information here is supplementary to the *Operating Instructions* provided with each column .

Scope of this document

This document describes the wheel kits as well as how to fit and remove the wheel kits from the columns. Wheel kits are intended to move columns using moving equipment attached to a coupling support on the wheel kit.

The moving equipment that can be used with an AxiChrom wheel kit must be ordered separately from the respective supplier. For more information, refer to the AxiChrom product pages on the Cytiva website.

For more information about AxiChrom columns refer to the user documentation provided with your column.

Read before operating



All users must read the following documents in their entirety before installing, operating, or maintaining AxiChrom columns:

- **this document, *Instructions for use (29145462)***
- **the *Operating Instructions* provided with each AxiChrom column**

Always keep this document, *Instructions for use 29145462*, and the *Operating Instructions* at hand when operating the product. Do not operate the product in any other way than described in the user documentation. If you do, you may be exposed to hazards that can lead to personal injury, and you may cause damage to the equipment.

Illustrations

Images are provided for general illustrative purposes only and may not accurately depict the wheel kit delivered.

Definitions

This user documentation contains safety notices (WARNING, CAUTION, and NOTICE) concerning the safe use of the product. See definitions below.



WARNING

WARNING indicates a hazardous situation which, if not avoided, could result in death or serious injury. It is important not to proceed until all stated conditions are met and clearly understood.



CAUTION

CAUTION indicates a hazardous situation which, if not avoided, could result in minor or moderate injury. It is important not to proceed until all stated conditions are met and clearly understood.



NOTICE

NOTICE indicates instructions that must be followed to avoid damage to the product or other equipment.

Notes and tips

Note: *A note is used to indicate information that is important for trouble-free and optimal use of the product.*

Tip: *A tip contains useful information that can improve or optimize your procedures.*

2 Safety Instructions

General safety precautions when moving columns

This section provides general safety information that must be observed when moving AxiChrom columns.



WARNING

Columns in swing-out or any kind of maintenance mode must not be moved. This can cause personal injury and damage to the column.



WARNING

Make sure that the wheels are immobilized when fitting or removing a wheel kit, so that the column cannot roll away.



WARNING

Do not immobilize a column equipped with a wheel kit on a sloping surface due to the risk of the column rolling away, tipping, or damage to wheels.



WARNING

The swivel wheel lock is only intended for locking their rotation during installation of the wheel kit. The locks are not intended to be used for preventing the movement of the column. Improper use can cause personal injury and damage to the column.



WARNING

Make sure no body part is between the column stand and a wheel kit when lifting or lowering the column.



WARNING

Maintain a safe distance when moving the column. Make sure that there is no one near the column when the column is in motion, other than the personnel required to perform lifting and moving procedures.



CAUTION

Use caution when moving columns equipped with wheels and take care to avoid accidental collisions.



CAUTION

Take care that fingers do not become pinched or trapped when using a jack or other lifting devices.



NOTICE

Do not perform any type of maintenance work on a column when it is fitted with a wheel kit. Maintenance work may only be carried out on columns when they are stably supported by the column feet.



NOTICE

To avoid damage to wheels and risk of tipping when the column is moved, make sure that the wheels of the wheel kit do not run into or over objects such as doorway thresholds or tubing.



NOTICE

Do not use the wheel trolley with the wheel spindle casement locknut fully tightened. This will prevent rotation of the wheels and result in damage to the wheel trolley.



NOTICE

Before the column is used, the wheels or casters must be removed and the column must be leveled.

NOTICE
Remove the moving arm attachment fittings before putting the column in maintenance mode.

NOTICE
After removing the moving arm attachment fitting from the column, make sure that the flange nut is refitted and tightened to the correct torque before the column is taken into operation again. Some column sizes have two flange nuts, both must be tightened to the correct torque.

3 AxiChrom 300–600 wheel kit

Introduction

This section describes how to fit a wheel kit for use with AxiChrom 300–600 columns.

In this chapter

Section		See page
3.1	Wheel kit description	10
3.2	Fit the wheel kit	12
3.3	Remove the wheel kit	17

Precautions



WARNING

Make sure that the wheels are immobilized when fitting or removing a wheel kit, so that the column cannot roll away.



WARNING

Do not immobilize a column equipped with a wheel kit on a sloping surface due to the risk of the column rolling away, tipping, or damage to wheels.



WARNING

Make sure no body part is between the column stand and a wheel kit when lifting or lowering the column.



NOTICE

Do not perform any type of maintenance work on a column when it is fitted with a wheel kit. Maintenance work may only be carried out on columns when they are stably supported by the column feet.

3.1 Wheel kit description

Introduction

This section describes the components of wheel kits for use with AxiChrom 300–600 columns.

Wheel kit components

The following image illustrates the main components of the wheel kit for use with AxiChrom 300–600 columns.



Part	Function
1	Lever
2	Rear wheels
3	Trolley bar
4	Trolley handle

Column fittings

The following images illustrate the key features used to fit the rear wheels and trolley bar to the column.

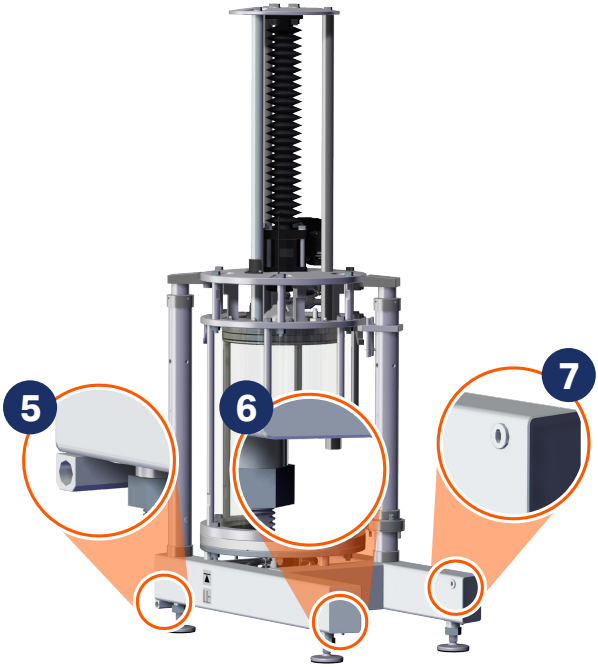

Part	Description
5	Hole for fitting rear wheels (2)
6	Pins for positioning the trolley bar (2)
7	Slots for fitting the trolley bar bolts (2)

3.2 Fit the wheel kit

Introduction

This section describes how to fit a wheel kit to AxiChrom 300–600 columns.

Prerequisites

To be able to use the AxiChrom 300–600 columns wheel kit, the following requirements must be met.

- The distance between the floor and the column stand must be 90–110 mm.
- There must be adequate free space to be able to move the column. For dimensions refer to the product documentation delivered with each column



WARNING

Columns in swing-out or any kind of maintenance mode must not be moved. This can cause personal injury and damage to the column.



WARNING

Make sure that the wheels are immobilized when fitting or removing a wheel kit, so that the column cannot roll away.

Fit the wheel kit

Follow these steps to fit the wheel kit to the column:

Step	Action
1	Adjust the feet of the column until there is a distance of 90–110 mm between the floor and the column stand.

Step	Action
2	Place the lever close to one of the rear feet and lower the lever arm to lift the column.

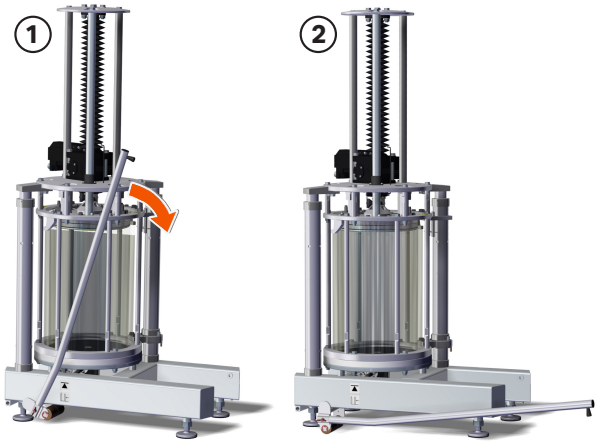

Tip:

The base of the lever arm can be repositioned to better fit restricted spaces.

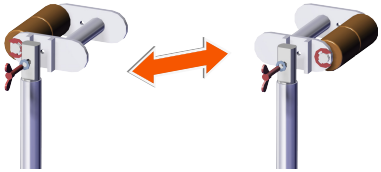

3	Fit the rear wheels in the fitting holes in the back of the column stand. Make sure that the washer and safety pin are correctly in place to secure the rear wheels.



4	Lift the lever arm to lower the column. Make sure that the column stands firmly on the wheels before removing the lever.

Step	Action
5	Fit the second pair of rear wheels beside the other rear foot by repeating steps 2 to 4 above.

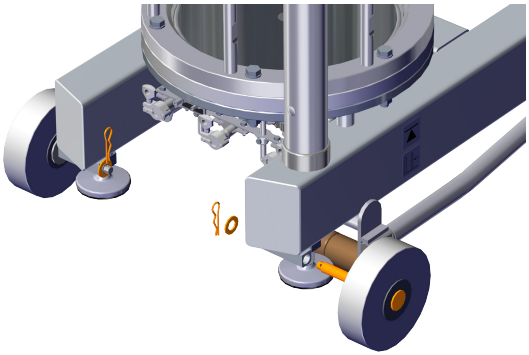

6	Unscrew the bolt on each side of the trolley bar so that it does not project out from each side of the trolley.
7	Screw the bolts into the slots at the front of the column stand to attach the trolley bar.

Note:

Make sure that the pins underneath the stand are properly fitted into their corresponding slots in the trolley bar before tightening the bolts.

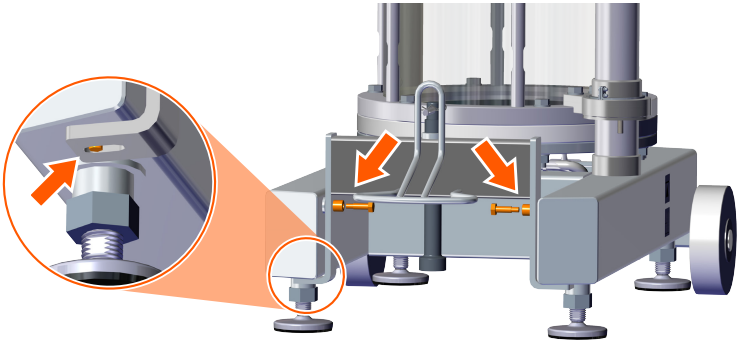

CAUTION

Heavy object. Two people are required to lift the trolley bar.

Step	Action
8	Place the lever close to one of the front feet and lower the lever arm to lift both sides of the front of the column. Screw the front feet completely into the column stand.

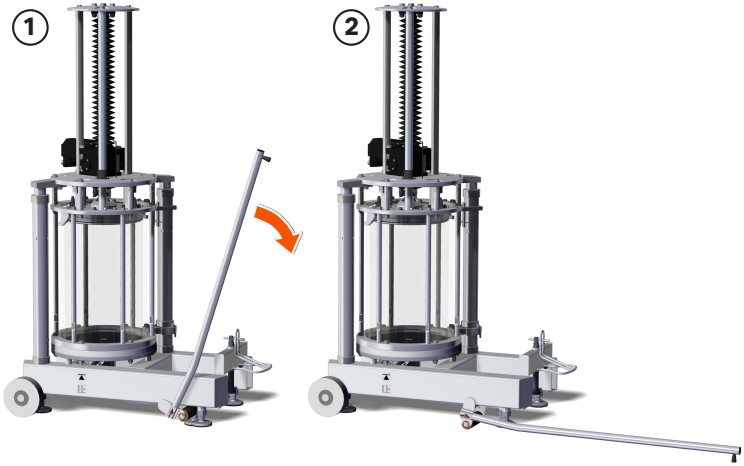

9	Attach the trolley bar handle to the coupling screw slot on the trolley bar as shown in the illustration. Adjust the height of the coupling slot so it rests on the trolley bar handle.

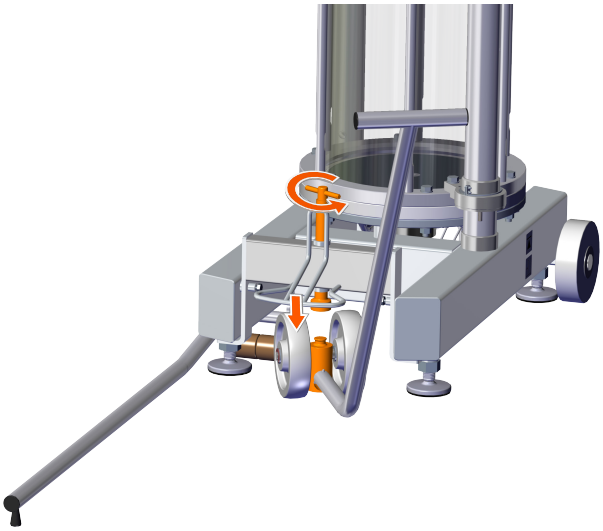

Step	Action
10	Lock the rotation of the coupling screw with the safety pin.
	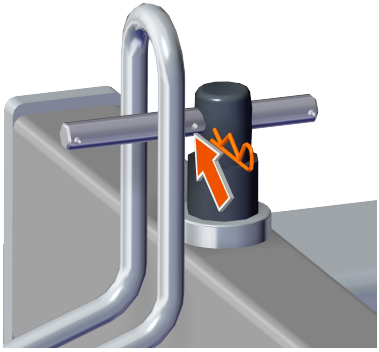
11	Lift the lever arm to lower the column. Make sure that the column stands firmly on all wheels before removing the lever.



The column can now be moved using the trolley bar handle.

3.3 Remove the wheel kit

Introduction

This section describes how to remove the wheel kit from AxiChrom 300–600 columns after they have been moved into position.

Remove the wheel kit

Follow these steps to remove the wheel kit from the column:

Step	Action
1	Adjust the front feet of the column until there is a distance of 90–110 mm between the column stand and the base of the feet.
2	Place the lever close to one of the front feet and lower the lever arm to lift both sides of the front of the column.

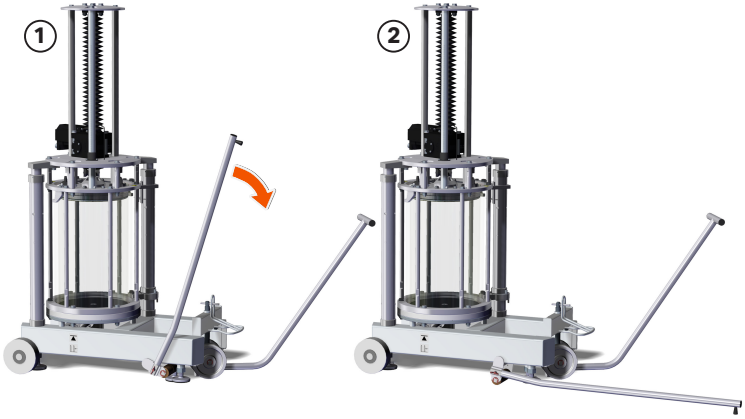

Tip:

The base of the lever arm can be repositioned to better fit restricted spaces.

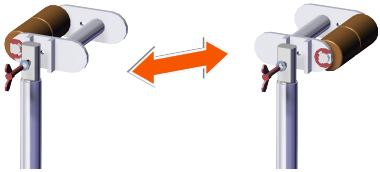

Step	Action
3	Remove the safety pin from the coupling screw on the trolley bar.

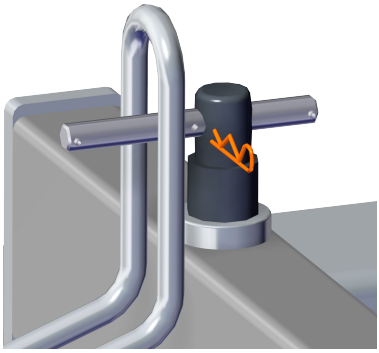

4	Lift the coupling screw to detach the trolley handle from the trolley bar.

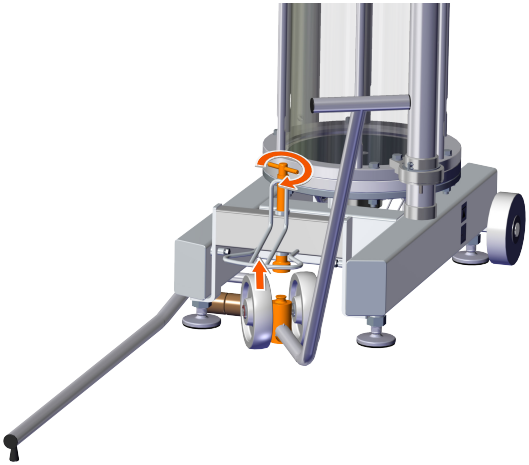

Step	Action
5	Unscrew the bolts from the front of the column stand to remove the trolley bar. Take care not to damage the pins underneath the stand.

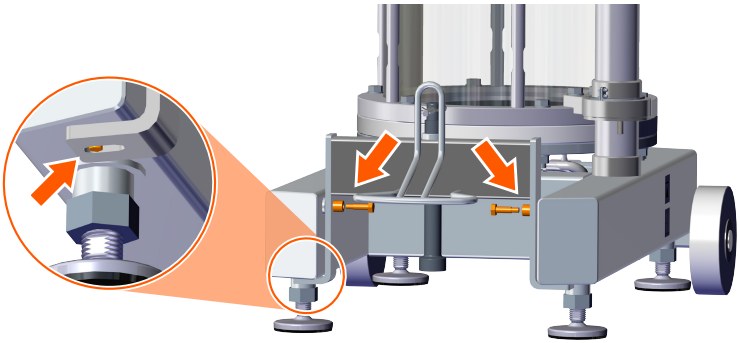

CAUTION

Heavy object. Two people are required to lift the trolley bar.

6	Lift the lever arm to lower the column. Remove the lever.
7	Place the lever close to one of the rear foot and wheels, and lower the lever arm to lift the column.

Tip:

The base of the lever arm can be repositioned to better fit restricted spaces.

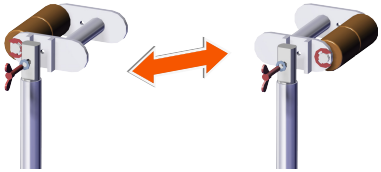

Step	Action
8	Remove the washer and safety pin from the wheels, and move the wheels out from the fitting hole in the column stand. 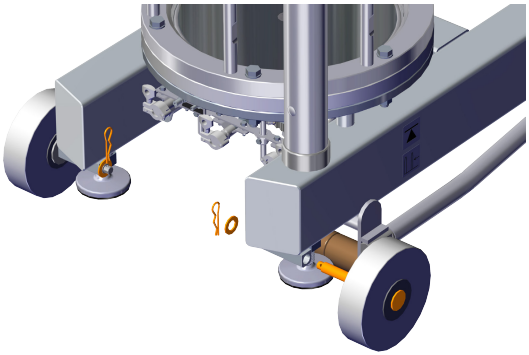
9	Lift the lever arm to lower the column. Remove the lever.
10	Remove the second rear wheel beside the other rear foot by repeating steps 7 to 9 above.
11	Make sure that the column stands firmly on all feet.
12	Make sure that the column is properly leveled.

4 AxiChrom 800–1000 wheel kit

Introduction

This section describes how to fit a wheel kit for use with AxiChrom 800–1000 columns.

In this chapter

Section		See page
4.1	Wheel kit description	23
4.2	Fit the wheel kit	25
4.3	Remove the wheel kit	32

Precautions



WARNING

Make sure that the wheels are immobilized when fitting or removing a wheel kit, so that the column cannot roll away.



WARNING

Do not immobilize a column equipped with a wheel kit on a sloping surface due to the risk of the column rolling away, tipping, or damage to wheels.



WARNING

The swivel wheel lock is only intended for locking their rotation during installation of the wheel kit. The locks are not intended to be used for preventing the movement of the column. Improper use can cause personal injury and damage to the column.



WARNING

Make sure no body part is between the column stand and a wheel kit when lifting or lowering the column.



CAUTION

Take care that fingers do not become pinched or trapped when using a jack or other lifting devices.



NOTICE

Do not perform any type of maintenance work on a column when it is fitted with a wheel kit. Maintenance work may only be carried out on columns when they are stably supported by the column feet.

4.1 Wheel kit description

Introduction

This section describes the components of wheel kits for use with AxiChrom 800–1000 columns.

Wheel kit components

The following images illustrate the main components of the AxiChrom 800–1000 columns wheel kit.

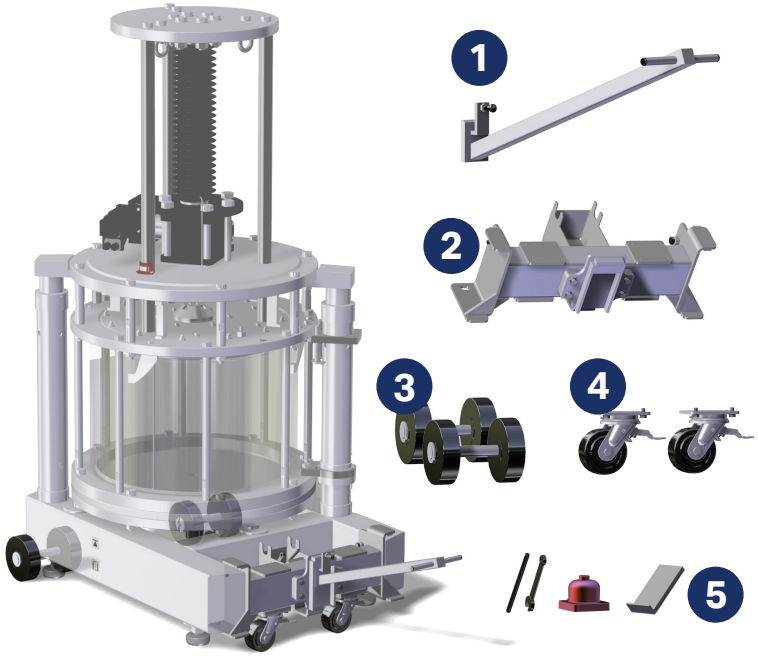

Part	Function
1	Trolley bar handle
2	Trolley bar
3	Rear wheels (two units)
4	Front caster wheels (two units)
5	Accessories for the wheel kit fitting: jack handle extension, wrench, jack, and jack support plate

Column fittings

The following images illustrate the key features used to fit the rear wheels and trolley bar to the column.

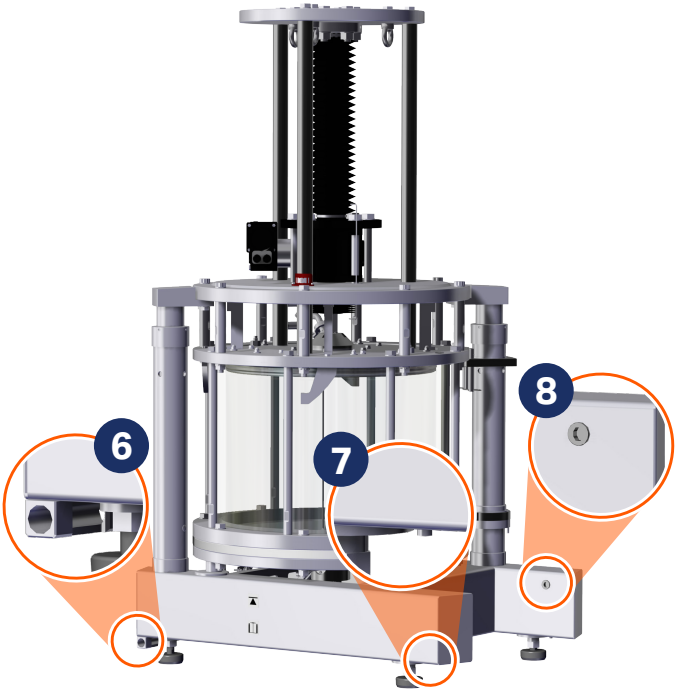

Part	Function
6	Hole for fitting rear wheels (2)
7	Pins for positioning the trolley bar (2)
8	Slots for fitting the trolley bar bolts (2)

4.2 Fit the wheel kit

Introduction

This section describes how to fit a wheel kit to AxiChrom 800–1000 columns.

Prerequisites

To be able to use the AxiChrom 800–1000 columns wheel kit, the following requirements must be met:

- The distance between the floor and the column stand must be between 95–135 mm.
- There must be adequate free space to be able to move the column. For dimensions refer to the product documentation delivered with each column



WARNING

Columns in swing-out or any kind of maintenance mode must not be moved. This can cause personal injury and damage to the column.



WARNING

Make sure that the wheels are immobilized when fitting or removing a wheel kit, so that the column cannot roll away.

Prepare the trolley bar

After removing the wheel kit from the transport box, perform the following steps to fit the trolley bar and trolley bar handle to the column.

Step	Action
1	Remove the rear wheel units from their storage positions.

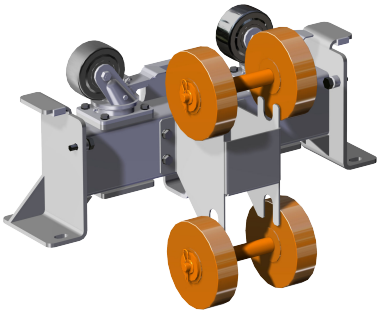

2	Attach the trolley bar handle to the coupling slot on the trolley bar as shown in the illustration.

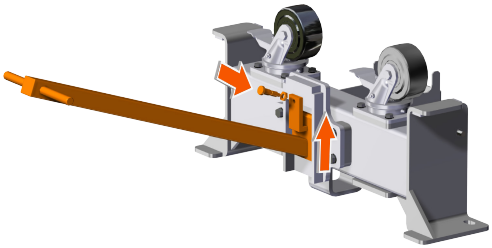

3	Unscrew and remove the fastening bolts and washers that hold the front caster wheel units to the top of the trolley bar in their storage positions.

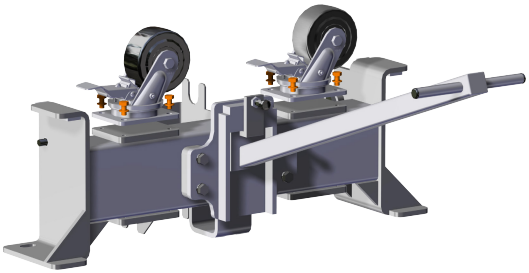

Step	Action
4	Position the front caster wheel units at the bottom of the trolley bar and screw the fastening bolts and washers to their respective positions. 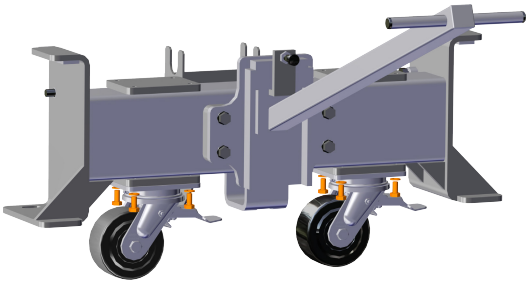
5	Unscrew the bolt on each side of the trolley bar so it does not project out from each side of the trolley. 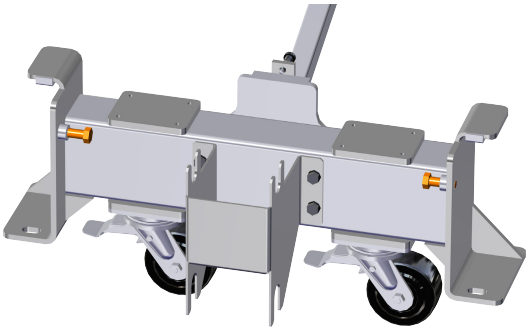

Fit the rear wheels

Follow these steps to fit the rear wheel units to the column:

Step	Action
1	Insert the saddle adapter delivered with the jack to the top of the jack, and then place the jack plate on top of the saddle adapter. ***Note:*** *Two heights of jack saddle adapter are provided. Select the appropriate height that allows the jack and jack plate to be positioned under the column stand.*

Step	Action
2	Move the jack into position under the column stand, close to one of the rear column feet.

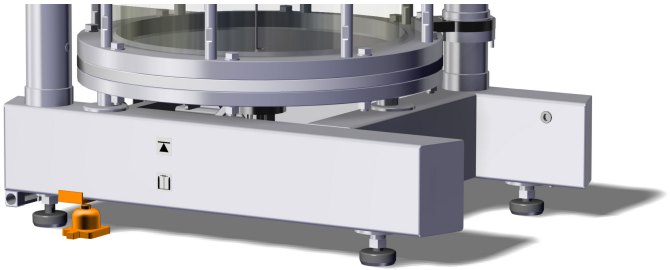

3	Use the jack to raise the rear of the column until it is high enough that the axle of the wheel unit can pass through the rear wheel fitting hole at the back of the column stand.

> **CAUTION**
> Take care that fingers do not become pinched or trapped when using a jack or other lifting devices.

4	Fit the rear wheels in the fitting holes. Make sure that the washer and safety pin are correctly in place to secure the rear wheels.

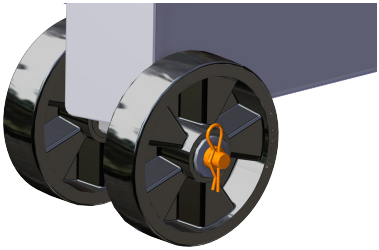

5	Use the jack to lower the column. Make sure that the column stands firmly on the wheels before removing the jack.

Step	Action
6	Fit the second pair of rear wheels beside the other rear foot by repeating steps 2 to 5 above.

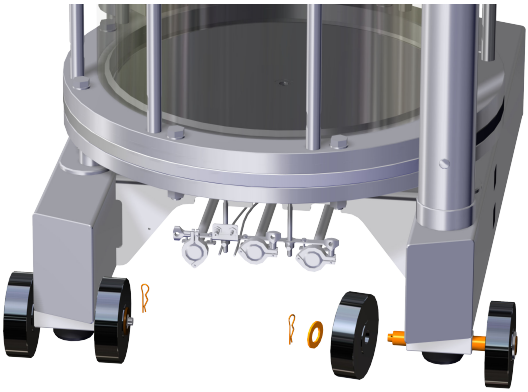

Fit the trolley bar

Follow the steps below to fit the trolley bar to the column.

Step	Action
1	Insert the saddle adapter delivered with the jack to the top of the jack, and then place the jack plate on top of the saddle. ***Note:*** *Two heights of jack saddle adapter are provided. Select the appropriate height that allows the jack and jack plate to be positioned under the column stand.*
2	Move the jack into position under the front beam of the column stand.

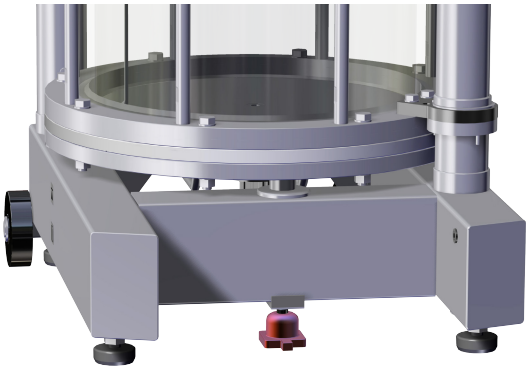

Step	Action
3	Use the trolley bar handle to position the trolley bar in front of the column.
4	Use the jack to raise the front of the column so that the trolley bar can be inserted on the front of the column stand.
5	Insert the trolley bar into the front of the column stand until the base of the column stand touches the stop plate on the trolley bar.



CAUTION

Heavy object. Two people are required to lift the trolley bar.

6	Gradually lower the column so that the column stand pins and the slots for the trolley bar bolts fit into the corresponding slots in the trolley bar.

Step	Action
7	Screw the bolts into the slots at the front of the column stand to attach the trolley bar.

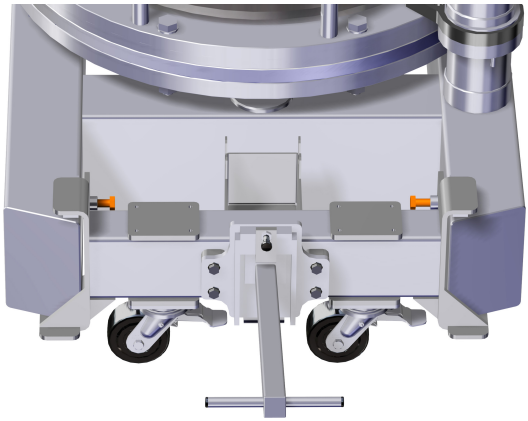

8	Fully lower and remove the jack, so that the column is fully supported on the wheel kit. Make sure that there is clearance between the column feet and the floor. Adjust the column feet if necessary so that the feet do not touch the ground.
9	Tighten the bolt on each side of the trolley bar.
10	Remove the trolley handle from the trolley bar.

NOTICE
The trolley handle is only intended for moving the trolley bar into position and must not be used when moving the column.

The column can now be moved using a MasterMover attached to the trolley bar.

Note: *Any moving equipment, such as a MasterMover, must be purchased separately from the respective manufacturer. For more information, refer to the AxiChrom product pages on the Cytiva website.*

4.3 Remove the wheel kit

Introduction

This section describes how to remove the wheel kit from AxiChrom 800–1000 columns.

Remove the trolley bar

Follow the steps below to remove the trolley bar.

Step	Action
1	Adjust the front feet of the column until there is a distance of 95–135 mm between the column stand and the base of the feet.
2	Insert the saddle adapter delivered with the jack to the top of the jack, and then place the jack plate on top of the saddle adapter. ***Note:*** *Two heights of jack saddle adapter are provided. Select the appropriate height that allows the jack and jack plate to be positioned under the column stand.*
3	Move the jack into position under the front beam of the column stand.
4	Place the jack support plate and jack with the appropriate saddle adapter under the front cross beam of the column stand. 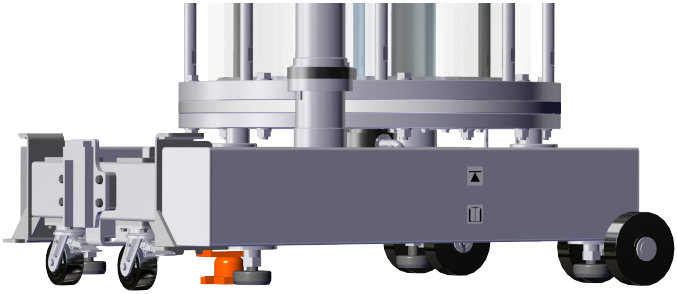
5	Fasten the trolley bar handle to the trolley bar.

Step	Action
6	Unscrew the bolt on each side of the wheel trolley. 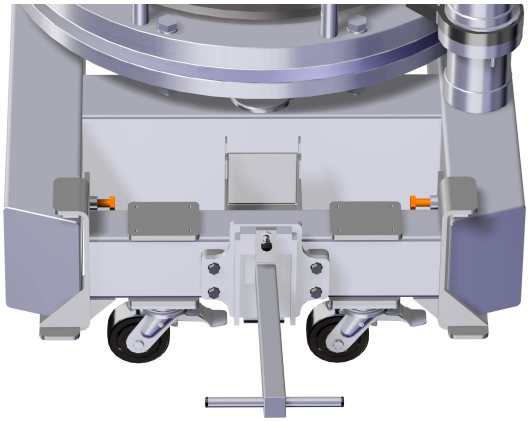
7	Use the jack to raise the front of the column so that the trolley bar can be removed from the front of the column stand.
8	Use the trolley bar handle to remove the wheel trolley from the front of the column.
9	Carefully lower and remove the jack, so that the column is fully supported on the column's front feet.

Remove the rear wheels

After removing the trolley bar, remove the rear wheels from the column by following the steps below.

Step	Action
1	Adjust the rear feet of the column until there is a distance of 95–135 mm between the column stand and the base of the feet.
2	Insert the saddle adapter delivered with the jack to the top of the jack, and then place the jack plate on top of the saddle. ***Note:*** *Two heights of jack saddle adapter are provided. Select the appropriate height that allows the jack and jack plate to be positioned under the column stand.*
3	Move the jack into position under the column stand, close to one of the rear column feet.

Step	Action
4	Use the jack to raise the rear of the column until the wheels are lifted from the floor and can be easily removed.

CAUTION

Take care that fingers do not become pinched or trapped when using a jack or other lifting devices.

5	Remove the safety pin from rear wheel axle, and remove the rear wheels from the fitting holes at the back of the column stand.

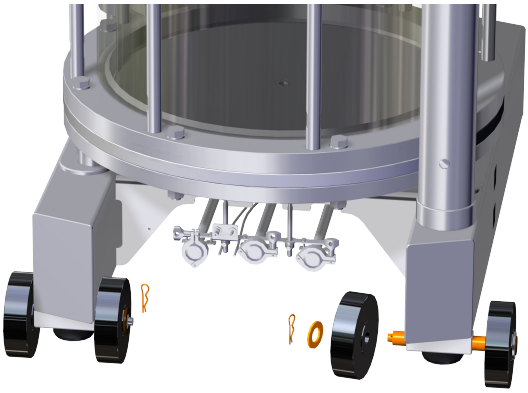

6	Use the jack to lower the column. Make sure that the column stands firmly on the foot before removing the jack.
7	Remove the second pair of rear wheels beside the other rear foot by repeating steps 3 to 6 above.
8	Make sure that the column stands firmly on all feet.
9	Remove the jack and make sure that the column is leveled before it is taken into use.

5 AxiChrom 1200–1600 wheel kit

Introduction

This section describes how to fit a wheel kit for use with AxiChrom 1200–1600 columns.

In this chapter

Section		See page
5.1	Wheel kit description	37
5.2	Fit the wheel kit	39
5.3	Remove the wheel kit	46

Precautions



WARNING

Make sure that the wheels are immobilized when fitting or removing a wheel kit, so that the column cannot roll away.



WARNING

Do not immobilize a column equipped with a wheel kit on a sloping surface due to the risk of the column rolling away, tipping, or damage to wheels.



WARNING

The swivel wheel lock is only intended for locking their rotation during installation of the wheel kit. The locks are not intended to be used for preventing the movement of the column. Improper use can cause personal injury and damage to the column.



WARNING

Make sure no body part is between the column stand and a wheel kit when lifting or lowering the column.



CAUTION

Take care that fingers do not become pinched or trapped when using a jack or other lifting devices.



NOTICE

Do not perform any type of maintenance work on a column when it is fitted with a wheel kit. Maintenance work may only be carried out on columns when they are stably supported by the column feet.

5.1 Wheel kit description

Introduction

This section describes the components of wheel kits for use with AxiChrom 1200–1600 columns.

Wheel kit components

The following image illustrates the main components of the wheel kit with additional equipment needed for moving AxiChrom 1200–1600 columns.

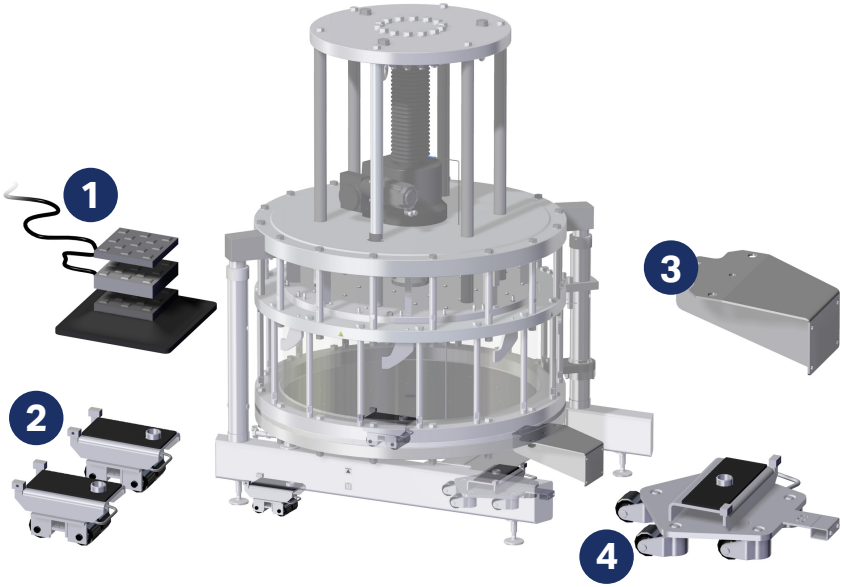

Part	Function
1	High pressure lifting bag with spacer blocks
2	Rear wheel trolleys (two units) with rubber protection pads
3	Column moving arm attachment fitting[1,2]
4	Front wheel trolley with rubber protection pad
5	Female combi coupling[2] (not pictured)

[1] The moving arm attachment varies depending on the size of the column.
[2] Sold as a separate accessory.

Column fittings

A moving arm attachment fitting is screwed to the underside of the column, and is used as the point of attachment for the arm of the moving equipment used to move the column. The moving arm attachment varies depending on the size of the column.

The following images illustrate the key features used to fit the rear wheels and trolley bar to the column.

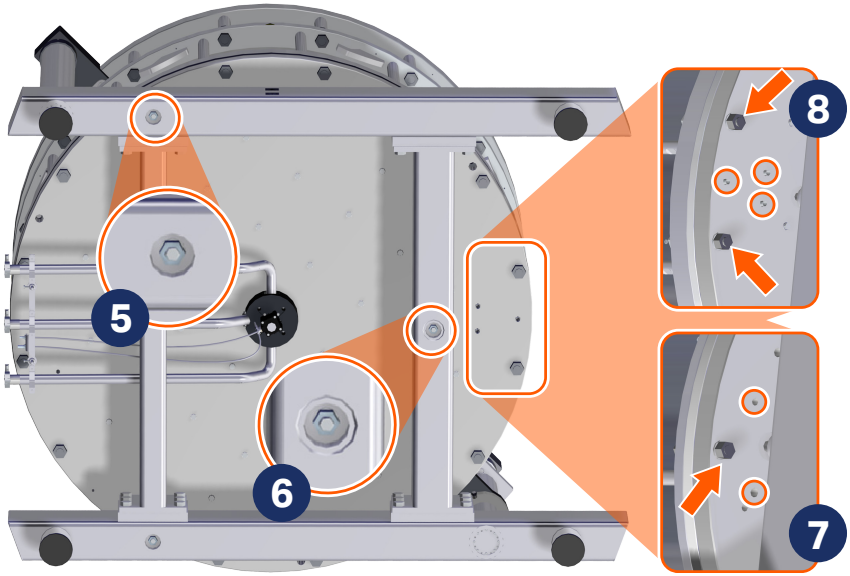

Part	Description
5	Column flange nuts
6	Moving arm attachment fitting bolts
7	Column flange nut (pointed with an arrow) and moving arm attachment fitting slots for AxiChrom 1200 and 1400 columns
8	Column flange nuts (pointed with an arrow) and moving arm attachment fitting slots for AxiChrom 1600 columns

Note: *AxiChrom 1200 and 1400 columns have two moving arm attachment fitting bolts. AxiChrom 1600 columns have three moving arm attachment fitting bolts.*

5.2 Fit the wheel kit

Introduction

This section describes how to fit a wheel kit to AxiChrom 1200–1600 columns.

Prerequisites

To be able to use the high pressure lifting bag and AxiChrom 1200–1600 columns wheel kit, the following requirements must be met:

- The distance between the floor and the column stand must be 160–180 mm.
- There must be adequate free space to be able to move the column. For dimensions refer to the product documentation delivered with each column
- The high pressure lifting bag must be connected to a pneumatic air supply with a minimum pressure of 4 bar g. For more information refer to the manufacturer's documentation delivered with the high pressure lifting bag.



WARNING

Columns in swing-out or any kind of maintenance mode must not be moved. This can cause personal injury and damage to the column.



WARNING

Make sure that the wheels are immobilized when fitting or removing a wheel kit, so that the column cannot roll away.

Fit the moving arm attachment fitting

The following instructions describe how to fit the moving arm attachment to the column.

Step	Action
1	Remove the corresponding column flange nuts from the column bottom backing plate as shown in the illustration.

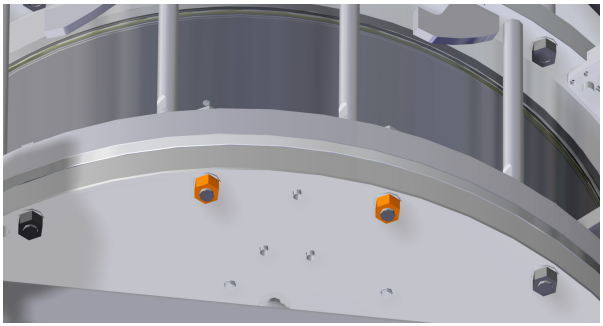

2	Attach the moving arm attachment to the bottom backing plate with the fitting bolts. Tighten the fitting bolts to 80 Nm.

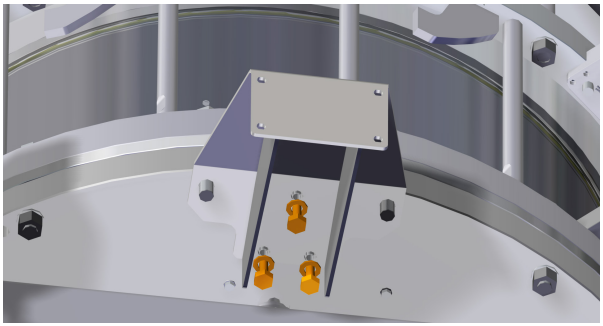

NOTICE

Wrap PTFE tape around the threads of the moving arm attachment fitting bolts before use.

3	Screw the column flange nuts back to their corresponding place on the bottom backing plate and tighten to the correct torque.

NOTICE

AxiChrom 1200 column flange nuts must be tightened to 180 Nm. AxiChrom 1400 and 1600 column flange nuts must be tightened to 300 Nm.

Fit the wheel trolleys

Follow the steps below to fit the wheel trolleys to the column.

Step	Action
1	Insert the rubber protection pads into the wheel trolleys as shown in the images below.

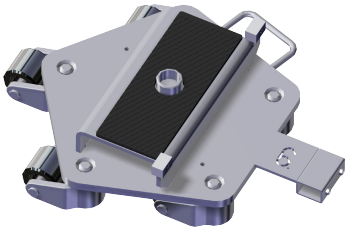

Front wheel trolley

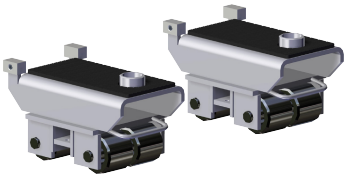

Rear wheel trolley

2	Place the high pressure lifting bag under the column stand at the center of balance label.

Note:

Use the provided spacer blocks to minimize the distance between the high pressure lifting bag and the column stand.

3	Place one rear wheel trolley close to the rear of the column stand as shown in the illustration.

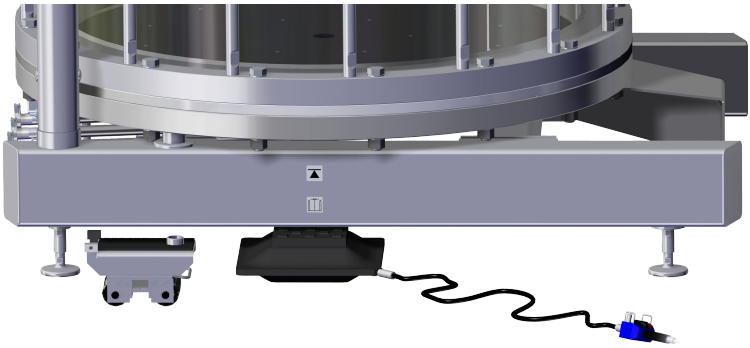

4	Use the high pressure lifting bag to lift the column stand until there is sufficient space to move the rear wheel trolley under the column stand.

Step	Action
5	Place the rear wheel trolley under the column stand. Make sure that the raised mounting socket on top of the wheel trolley is aligned with the corresponding recess in the column stand.

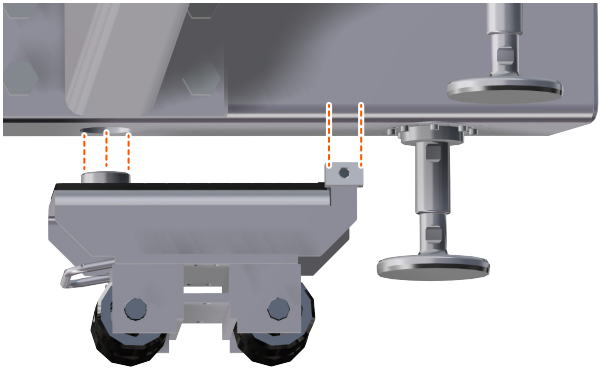

6	Gradually lower the column so that the mounting socket and raised tabs on the wheel trolley fit into their corresponding fittings in the column stand. Make sure that the column stands firmly on the wheels before removing the high pressure lifting bag.

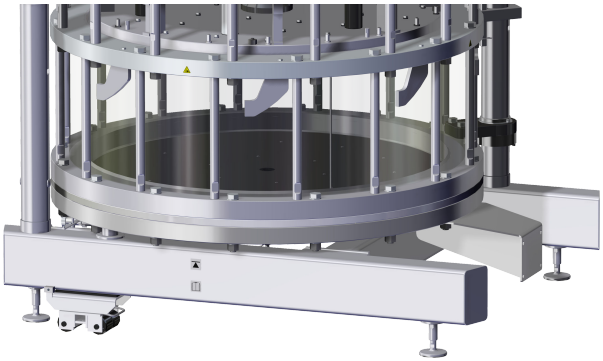

7	Fit the second rear wheel trolley beside the other rear foot by repeating steps 2 to 6 above.
8	Make sure that the column is securely supported on both rear wheel trolleys.

Step	Action
9	Place blocks in front of the rear wheel trolleys to prevent the wheels from rolling while the front wheel trolley is being fitted.

WARNING

Make sure that the wheels are immobilized when fitting or removing a wheel kit, so that the column cannot roll away.

Note:

The wheels are immobilized by placing customer supplied blocks in front of the wheels.

10 Place the high pressure lifting bag under the front crossbeam of the column stand leaving sufficient space to fit the front wheel trolley as shown in the illustration below.

Note:

Use the provided spacer blocks to minimize the distance between the high pressure lifting bag and the column stand.

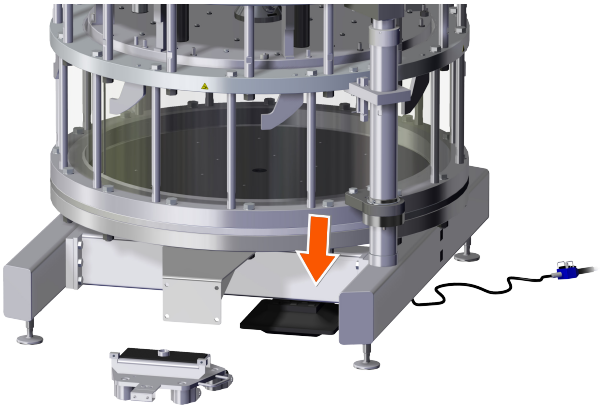

11 Use the high pressure lifting bag to lift the column stand until there is sufficient space to move the front wheel trolley under the column stand.

Step	Action
12	Place the front wheel trolley under the front crossbeam of the column stand. Make sure that the raised mounting socket on top of the wheel trolley is aligned with the corresponding recess in the column stand.

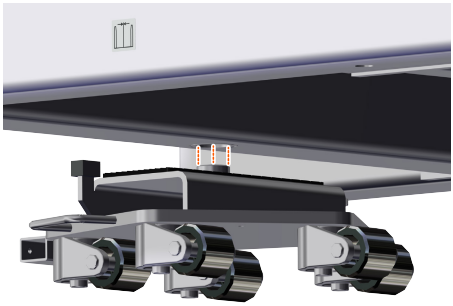

13	Gradually lower the column so that the mounting socket and raised tabs on the wheel trolley fit into their corresponding fittings in the column stand. Make sure that the column stands firmly on all wheels before removing the high pressure lifting bag.

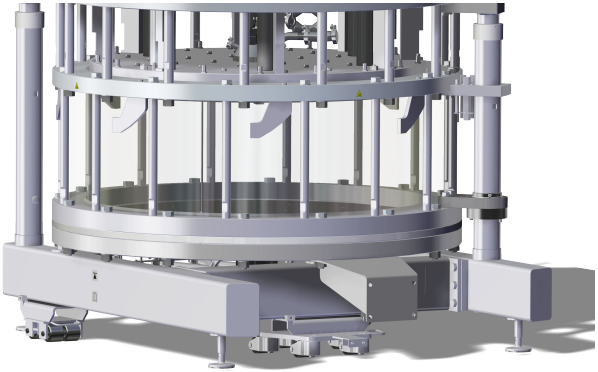

The column can now be moved using a female combi coupling and a MasterMover attached to the column moving attachment fitting.

WARNING

Maintain a safe distance when moving the column. Make sure that there is no one near the column when the column is in motion, other than the personnel required to perform lifting and moving procedures.



NOTICE

Make sure that there is a minimum distance of 20 mm between the floor and the column feet before starting to move the column.

Note: *Any moving equipment, like a MasterMover, must be purchased separately from the respective manufacturer. For more information, refer to the AxiChrom product pages on the Cytiva website.*

5.3 Remove the wheel kit

Introduction

This section describes how to remove the wheel kit from AxiChrom 1200–1600 columns.

Remove the wheel trolleys

Follow the steps below to remove the wheel kit after the column has been moved to the intended operating location.

Step	Action
1	Place blocks in front of the front and rear wheel trolleys to immobilize them. ***Note:*** *The wheels are immobilized by placing customer supplied blocks in front of the wheels.*
2	Disconnect the moving equipment from the moving arm attachment fitting.
3	Measure the distance between the base of the column stand and the floor. Adjust the column feet as necessary so that all of the corners of the column stand are the same distance from the floor. **NOTICE** Extending the column legs more than the maximum leg extension distance can damage the threads. The base of the column stand must be less than 220 mm from the floor.
4	Place the high pressure lifting bag under the front crossbeam of the column stand next to the front trolley. ***Note:*** *Use the provided spacer blocks to minimize the distance between the high pressure lifting bag and the column stand.*

Step	Action

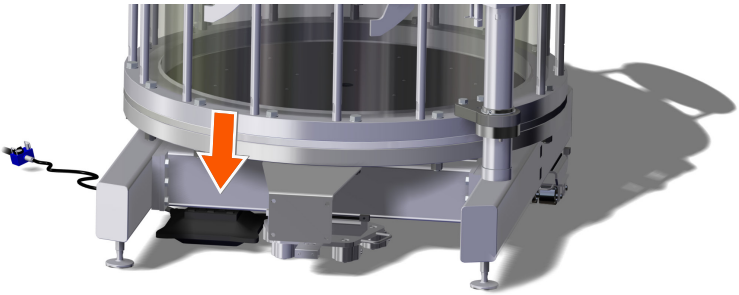

5 Lift the front of the column until it is no longer supported by the front wheel trolley.

6 Remove the front trolley.

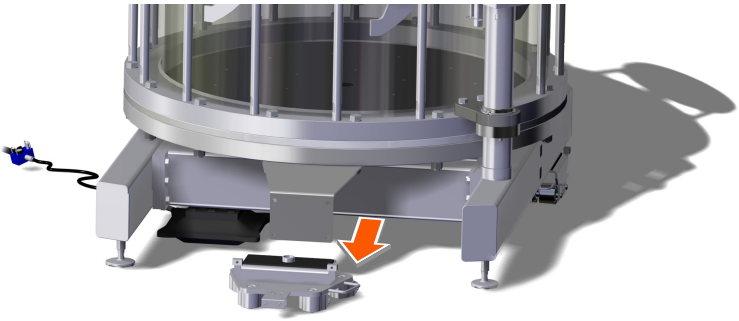

7 Carefully lower the front of the column until it is fully supported by the front column feet.

8 Place the high pressure lifting bag under one side of the column stand at the center of balance label.

9 Lift the side of the column until it is no longer supported by the rear wheel trolley.

Step	Action
10	Remove the rear wheel trolley. 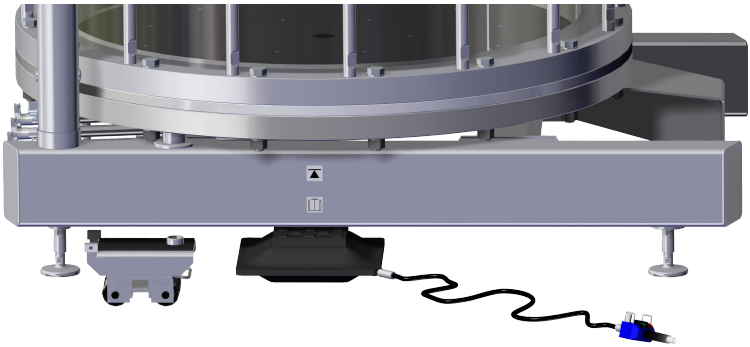
11	Lower the side of the column until it is fully supported by the column feet.
12	Remove the lifting bag, and then repeat steps 8 to 11 to remove the second rear wheel trolley under the opposite side of the column stand.
13	Make sure that the column stands firmly on all feet.
14	Make sure that the column is leveled before it is taken into use.

NOTICE

If the moving arm attachment fitting is removed from the column, make sure that the flange bolt nuts have been refitted and tightened to the correct torque before the column is taken into operation again.

Page intentionally left blank

Give feedback on this document

Visit cytiva.com/techdocfeedback or scan the QR code.

cytiva.com

Cytiva and the Drop logo are trademarks of Life Sciences IP Holdings Corporation or an affiliate doing business as Cytiva.

AxiChrom is a trademark of Global Life Sciences Solutions USA LLC or an affiliate doing business as Cytiva.

MasterMover is a trademark of M-Mover Holdings Limited

Any other third-party trademarks are the property of their respective owners.

© 2024 Cytiva

For local office contact information, visit cytiva.com/contact

29145462 AC V:7 04/2024